DO NOT SCALE	IF IN DOUBT PLEASE ASK	ENGINEERING STANDARDS ARE REFERENCED AS 5-3-05-05- SERIES, IF IN DOUBT, PLEASE REQUEST LATEST ISSUE.	PROJECT No:- 177025	TEST SPEC No:- TS177025	ALPHA ISSUES RECORD PRE-PRODUCTION CHANGES	3D DWG
			PERFORMANCE GRAPH No:- G12097			

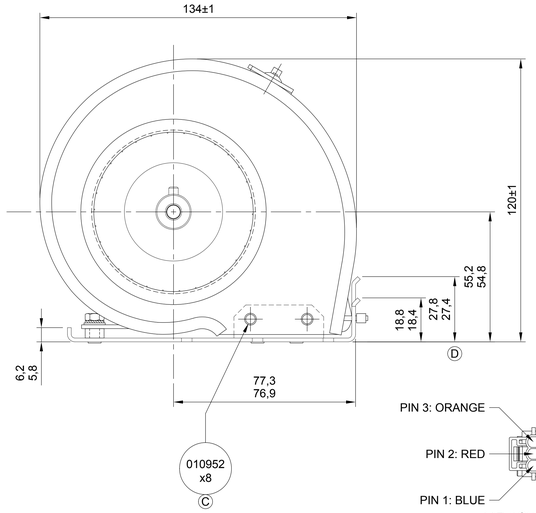

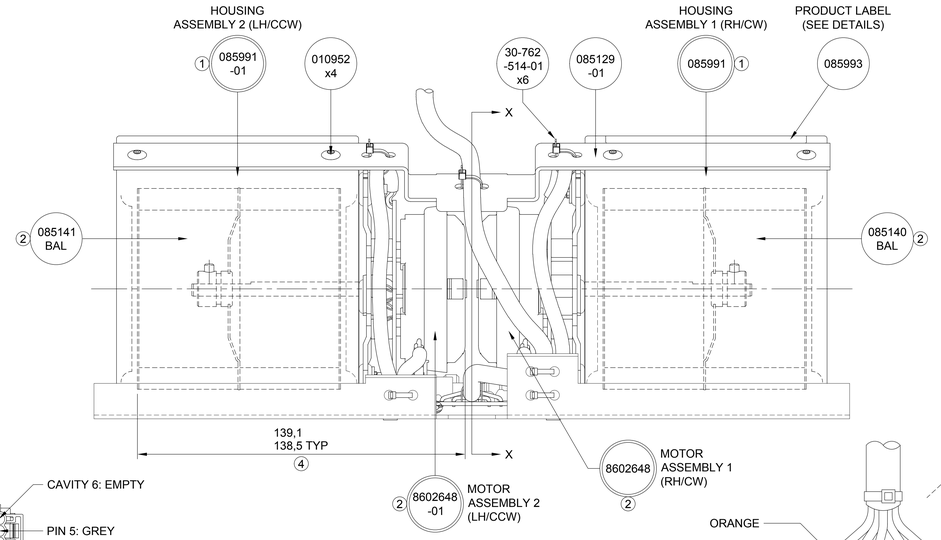

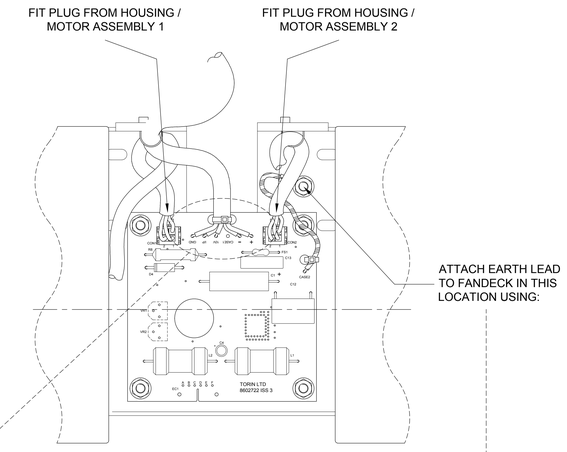

VIEW ON ARROW 'A'
INTERFACE PCB DETAILS
D

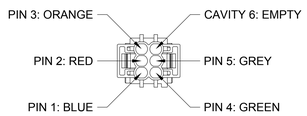

VIEW ON ARROW 'Z'
SHOWING TERMINAL PLACEMENT

CONNECTOR HOUSING: AMP REF 1-962349-1
CONNECTOR TERMINAL: AMP REF 1-963748-1

PIN No.	COLOUR	FUNCTION
1	BLUE	SUPPLY -VE
2	RED	SUPPLY +VE
3	ORANGE	POTENTIOMETER +
4	GREEN	POTENTIOMETER OUTPUT
5	GREY	POTENTIOMETER -
6	EMPTY	

torin-sifan
The Partner of Choice
SWINDON SN3 3JB

TORIN PART No. 177025
DPL85-86 48Vdc 150W
VOLTAGE RANGE 24 TO 56Vdc
POTENTIOMETER SPEED CONTROLLED
DATE CODE & WORKS ORDER No
SERIAL No

LABEL DETAILS

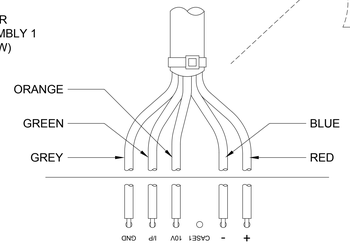

LEAD CONNECTION DETAILS

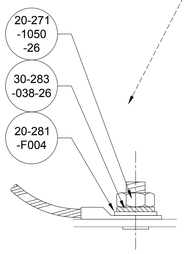

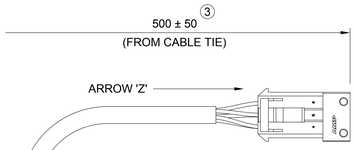

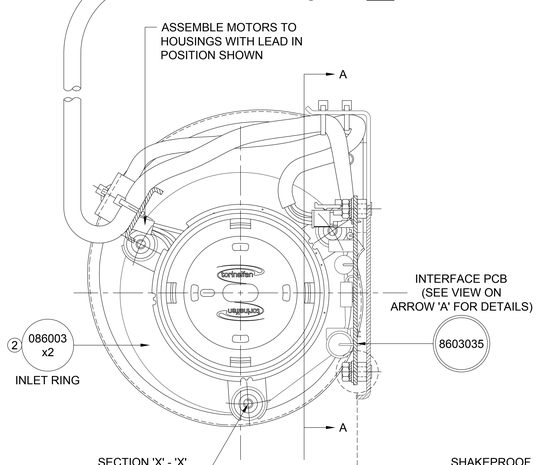

SECTION 'X' - 'X'

ARROW 'A'
INTERFACE PCB

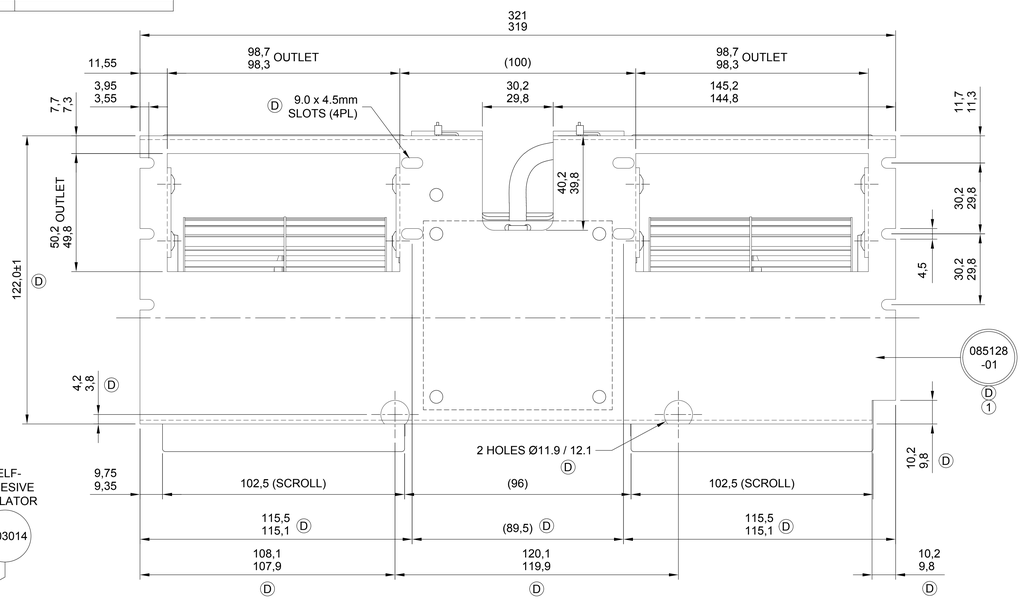

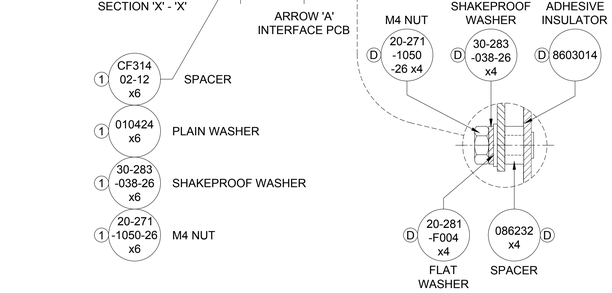

NOTES:

1. Electrical details:
Nominal supply voltage 48Vdc (24 to 56Vdc range).
Maximum operating current 3.5A
Motor has reverse polarity protection.
Consideration should be given to ESD (electrostatic discharge) guidelines when handling product.

2. Motor characteristics:
Soft-start from switch-on, limiting power during start-up.
Speed is controlled via an external 10k potentiometer (3 connections, orange=POT+, grey=POT-, green=POT output),
Motor is protected against locked rotor condition with power being disengaged for a period of 1 second after which the motor will attempt to restart.
This cycle is repeated until the condition is cleared.

3. Environmental parameters:
Operating temperature range -40°C to +60°C, storage temperature range -40°C to +85°C, humidity range 5% to 90% rel. humidity non-condensing.
Motor drive is moisture protected.

4. General information:
Materials: fan casings and deck galvanized sheet steel, bearing housings plastic, impellers aluminium alloy, shaft stainless steel, anti-vibration mounts EPDM rubber / PVC, motor rotor plastic.
Balance: Rotor G2.5 @ 3500rpm.
Impeller G4 @ 3500rpm.
Rotor and impeller balanced separately prior to assembly.
Connections: the fan is connected via AMP Connector 1-962349-1, leads crimped with AMP Terminal 1-963748-1 and sealed with wire seal 828904-1, (empty position sealed with blanking seal 828922-1).
Maximum weight 3.0kg. Fans to be packed in individual boxes and supported to prevent damage during transit.

5. All dimensions are for reference purposes only.

DRAWING NO. 177025

ISS.	MODIFICATION	DATE	C/N NO.
4	PICTORIAL CHANGE TO MOTOR MOUNTING PLATE THICKNESS	03/12/14	19442
3	MOTOR LEAD LENGTH REDUCED BY 500mm	19/09/14	19395
2	SERIAL No. ADDED TO LABEL. MOTOR/IMPELLER/INLET RING SUB-ASSEMBLIES DELETED AND REPLACED WITH COMPONENT PARTS AND ASSEMBLIES. PICTORIAL CHANGE TO CAPACITOR.	03/07/14	19298
1	ISSUED	13/01/14	19211
F	PICTORIAL CHANGES TO INTERFACE PCB	11/06/13	19081
E	PICTORIAL CHANGES TO INTERFACE PCB	22/01/13	18977
D	CHANGES MADE TO DECK AND MOTOR MOUNTING	20/09/12	18754
C	VARIOUS CHANGES	12/08/11	
B	VARIOUS CHANGES	20/06/11	EWR 2451
A	PROVISIONAL	05/01/11	EWR 2256

MATERIAL
GALVANISED STEEL WITH ALUMINIUM IMPELLERS

FINISH
NATURAL

FIRST USED ON
OEM / BT PEGES

SIMILAR TO
077607

DIRECTORY PATH
\ASY\DPL\85-86\177025

TITLE
ASY FANDECK
DPL85-86 48V DC

DRAWING NO.
177025

torin-sifan
The Partner of Choice
Torin Limited
Drakes Way
Swindon Wiltshire
SN3 3JB
Tel : (01793) 524291

THIS DRAWING AND SPECIFICATIONS IS THE EXCLUSIVE PROPERTY OF TORIN LIMITED, ISSUED IN STRICT CONFIDENCE AND SHALL NOT BE REPRODUCED, COPIED OR USED FOR ANY REASON OTHER THAN WHICH IT IS ISSUED, WITHOUT THE WRITTEN PERMISSION OF TORIN LIMITED.
© TORIN LIMITED

PRODUCT TYPE: FANDECK
TECH 1: AC ☐ EC ■
TECH 2: AC ☐ BD ☐ CP ☐ DC ■ ECI ☐ ECR ☐
ERP DIRECTIVE: N | Ng/EN ARTICLE: A21

PROJECTION | DR. DA | CHKD | AP. | A1
DATE 05/01/11 | DATE | DATE
DRAWING GENERALLY CONFORMS TO BS 8888 | DIMENSIONS IN MILLIMETRES
ALL BS TO LATEST ISSUE | SCALE: N.T.S. (UNLESS OTHERWISE STATED)

DRAWING NO. 177025

EP24/5-A1